SC3 Frame (Cantilevered Three-Member Frame)

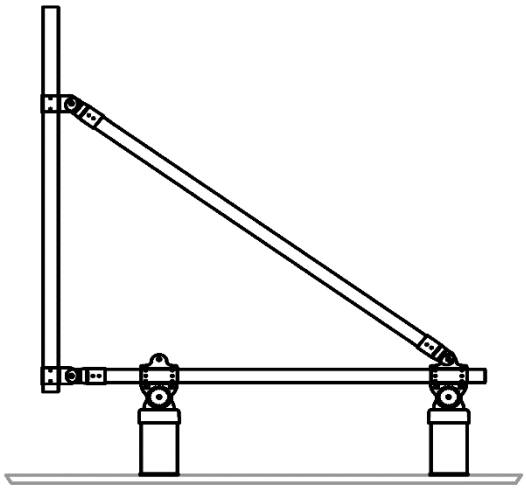

Example of RoofScreen SC3 Frame Configuration

Description:

The SC3 consists of 3 round galvanized tube members, stainless steel connector fittings and our Square Base Support system which allows adjustment for roof slope and a watertight connection. This system is highly adjustable during installation and does not require perfect alignment of the front Base Supports from frame to frame.

Application:

SC3 frames are designed to be used as the primary structural supports for equipment screens on flat and low sloped commercial rooftops. The frames can accommodate virtually any type of face panels or materials to achieve the desired aesthetics for the building. The Base Support system can attach in a watertight manner to any type of roof construction, occasionally needing additional structural blocking or reinforcement.

Materials/Components:

Tubing:

- High-strength Gatorshield Galvanized Steel Tubing. Superior corrosion resistance with triple layer of protection conforming to the highest standards of ASTM A1057.
- 2.5” O.D., 16ga and 11ga.
- Minimum 50 ksi yield and 55 ksi tensile.

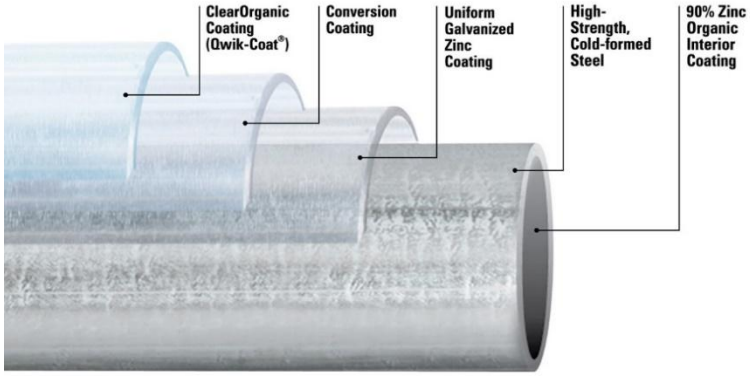

Connector Fittings:

- Formed from AISI Type 304 Stainless Steel.
- Mill finish.



Hardware:

- Nuts and bolts used for connectors are corrosion resistant 18-8 stainless steel.
- Tek Screws and Sealing Bolts are carbon steel with premium coating.

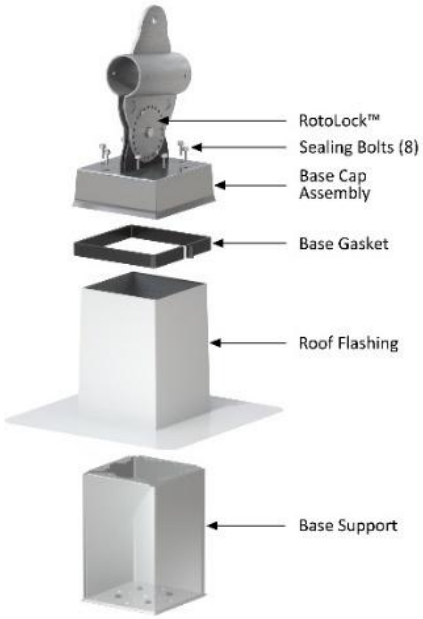

Roof Connections:

- RoofScreen's Square Base Roof Attachment System.
- Welded steel Base Support.
- Flashing boot matching roof type.
- Foam rubber gasket for added protection from ice and splashing water.
- Stainless steel Base Cap with integral counter-flashing.

Structural Notes:

The modular design allows the frame configuration and spacing to be adapted to any wind load. In high wind load regions, the frames are installed closer together and use heavier materials. The Square Base Support system is adjustable for roof slope and features our RotoLock® mechanism which allows it to be locked together after adjustment, creating a moment absorbing connection and reducing the torque that would otherwise be transferred into the roof structure.

All projects require analysis and calculations by a licensed professional engineer to ensure the design is appropriate for the specific conditions that apply.

HSS Variants

Standard Frames are also available with optional Heavy-Duty HSS members. These configurations are generally reserved for applications where wind load is extreme. HSS tubing can be used on horizontal or both horizontal and vertical frame members. Our HSS Square Base Roof Attachment System is used for this frame variant. Below are examples of these frame configurations, frames may vary per project.

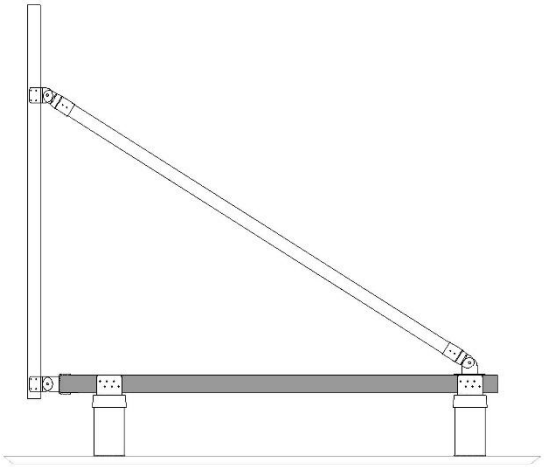

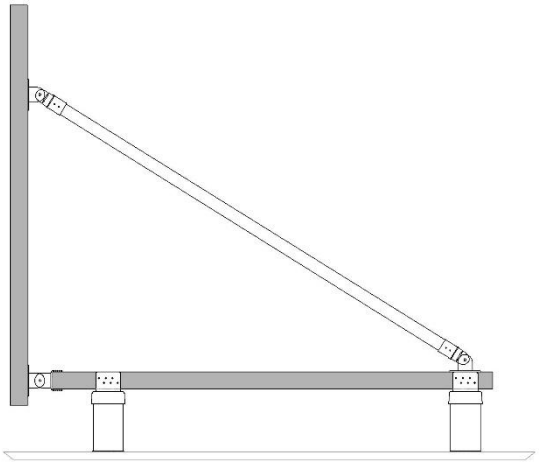

HSS Tubing Materials:

- 3.5x3.5x.125” ; 3.5x3.5x.1875” ; 3.5x3.5x.25"
- G90 Hot Dipped Galvanized
- A500 Grade B Steel
- Minimum 46 ksi yield and 58 ksi tensil

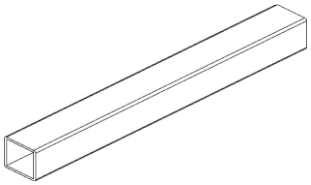

Roof Connections:

- RoofScreen’s HSS Square Base Roof Attachment System.
- Welded steel Base Support.
- Optional base support extension.
- Flashing boot matching roof type.
- Foam rubber gasket for added protection from ice and splashing water.
- Stainless steel Saddle Base Cap with integral counter-flashing.

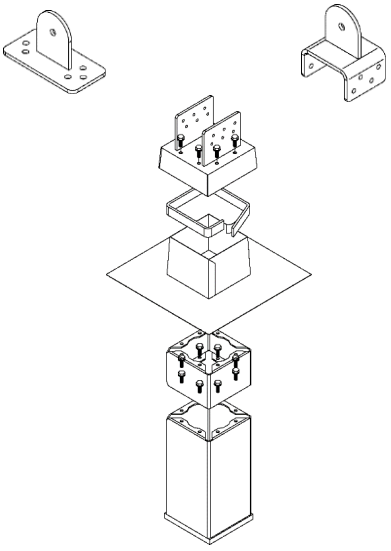

Installation:

For typical RoofScreen projects, the frame tubes are delivered pre-cut based on the dimensions of the tallest frame on the project. Depending on the amount of roof slope, some tubes may require field trimming during installation. The installation consists of connecting the tubes together with pre-assembled fittings, adjusting for levelness then locking them together with self-drilling tek screws. A full installation manual is available, and most projects include full shop drawings showing project specific details.

Warranty:

When the system is designed and engineered by RoofScreen Mfg., we include a 20-year limited warranty.